STURDI-BILT
RESTAURANT EQUIPMENT, INC.
8132 Puritan Avenue, Detroit, Michigan, 48238
Phone Toll Free - 1-800-521-2895
Fax Toll Free 1-800-444-2895

APPROVAL SHEET

NSF Listed
Standard 2

Double Over Shelves

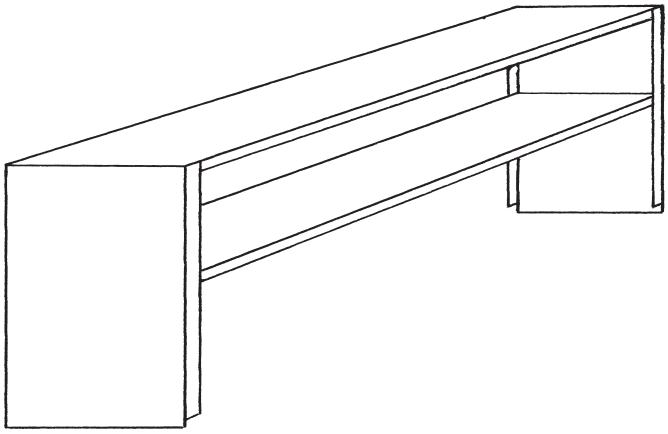

Job Name:		
Dealer:		
P.O. #:	By:	Date:
Fabrication cannot begin until sheet is signed		
Approved by		Date

Specifications

Sturdi-Bilt Double Overshelving Constructed out of 18 Gauge Type 304 18% Chrome, 8 % Nickel Stainless Steel, with solid stainless steel ends
Provide as Follows
Shelf _____Ft Long x _____" Wide x 29" High

Options
- ☐ Heat Lamp Channels
- ☐ 16 Gauge S/S Construction in lieu of 18 Gauge
- ☐ Heavy Duty Construction for plate storage
- ☐ Custom Height
- ☐ _____
- ☐ _____
- ☐ _____
- ☐ _____
- ☐
- ☐